T810S-A008C

汽 车 继 电 器 | TRS

- 30A 13.5VDC switching rating
- 40A inrush at 13.5VDC
- Smallest power relay
- 1 Form A and 1 FormC arrangements in single and dual relay packages
- For Automotive Applications
- Conform to RoHS,ELV directive

13.2×12×9. 8

■ORDERING CODE 定购代码

TRS D— S — H / 12VDC
1 2 3 4 5

1. Relay Model 继电器型号
2. Coil Power 线圈功耗
   L: 0.57W
   D:0.8W
3. S: Sealed 密封
   Nil: Vented(Flux-tight) 防焊剂型
4. 触点转换形式
   H: Form A
   Z: Form C
5. Coil Nominal Voltage 线圈额定电压
   6,12,24VDC

■COIL DATA 线圈参数（at 20℃）

Nominal Voltage额定电压(VDC)	6	12	24	0.57W
Coil Resistance线圈阻值(Ω±10%)	63	254	1010	
Rated Current额定电流(mA)	95	47.5	23.7	
Max Operate Voltage 最大吸合电压(VDC)	3.45	6.9	13.8	
Min Release Voltage最小释放电压(VDC)	0.6	1.2	2.4	
Coil Resistance线圈阻值(Ω±10%)	45	180	720	0.8W
Rated Current额定电流(mA)	133.3	66.7	33.3	
Max Operate Voltage 最大吸合电压(VDC)	3.45	6.9	13.8	
Min Release Voltage最小释放电压(VDC)	0.6	1.2	2.4	
Max Applicable Voltage 最大过载电压	70℃时额定电压的130%，23℃时额定电压的170%			

■CONTACT DATA 触点参数

	负载类型 Load Type		触点负载电流(A) NO 常开	触点负载电流(A) NC 常闭	Frequency 频率 ops/min	Duty Cycle 占空比	电气寿命(次) Life Expectancy
Contact Ratings 触点负载	Resistive Load阻性负载		20	---	15	0.5	3×10^5
	Wiper reserve雨刷电机 L=1.0mH	Make接通	25	25	15	0.5	3×10^5
		Break断开	5	5			
	Motor reserve blocked电机锁定 L=0.77mH		20A Inrush		15	0.5	1×10^5
	Flasher Load 闪光灯		3×21W	---	80	0.5	2×10^6
	Lamp 灯	Inrush突入	100	---	6	1/6	1×10^5
		Steady state稳态	10	---			

Contact　Form触点形式	1H/1Z
Contact　Material触点材料	Silver Alloy
Load负载	Resistive load(COSΦ=1)　Cut 13.5VDC
Minimum load 最小负载	0.5A 12VDC
Max Switching Current最大转换电流	40A
Max Switching Power 最大转换功率	420W
Contact Resistance接触电阻	100mΩMax　at 6VDC 1A
Electrical Life Expectancy电气寿命	See “Contact Data” Table
Mechanical机械寿命	10,000,000 Operations(at300Operations/minute)

■CHARACTERISTICS DATA 性能参数

Insulation Resistance绝缘阻值	100MΩMin at 500VDC
Dielectric Strength Between Open Contacts触点间耐压	500VAC(for one minute)
Between Contacts and coil触点与线圈间耐压	500VAC(for one minute)
Operate Time吸合时间	4ms
Release Time释放时间	2ms
Temperature Range环境温度	-40℃to+105℃
Shock Resistance冲击	6 msec up to 30g (No change in the switching state>10μsec)
Vibration Resistance振动	10-500Hz, 6g (No change in the switching state>10μsec)
Max. switching frequency最大转换频率	Mechanical:18,000operations/hr
Humidity湿度	20-50%
Weight重量	Approx 4g

■ENGINEERING DATA 设计参数

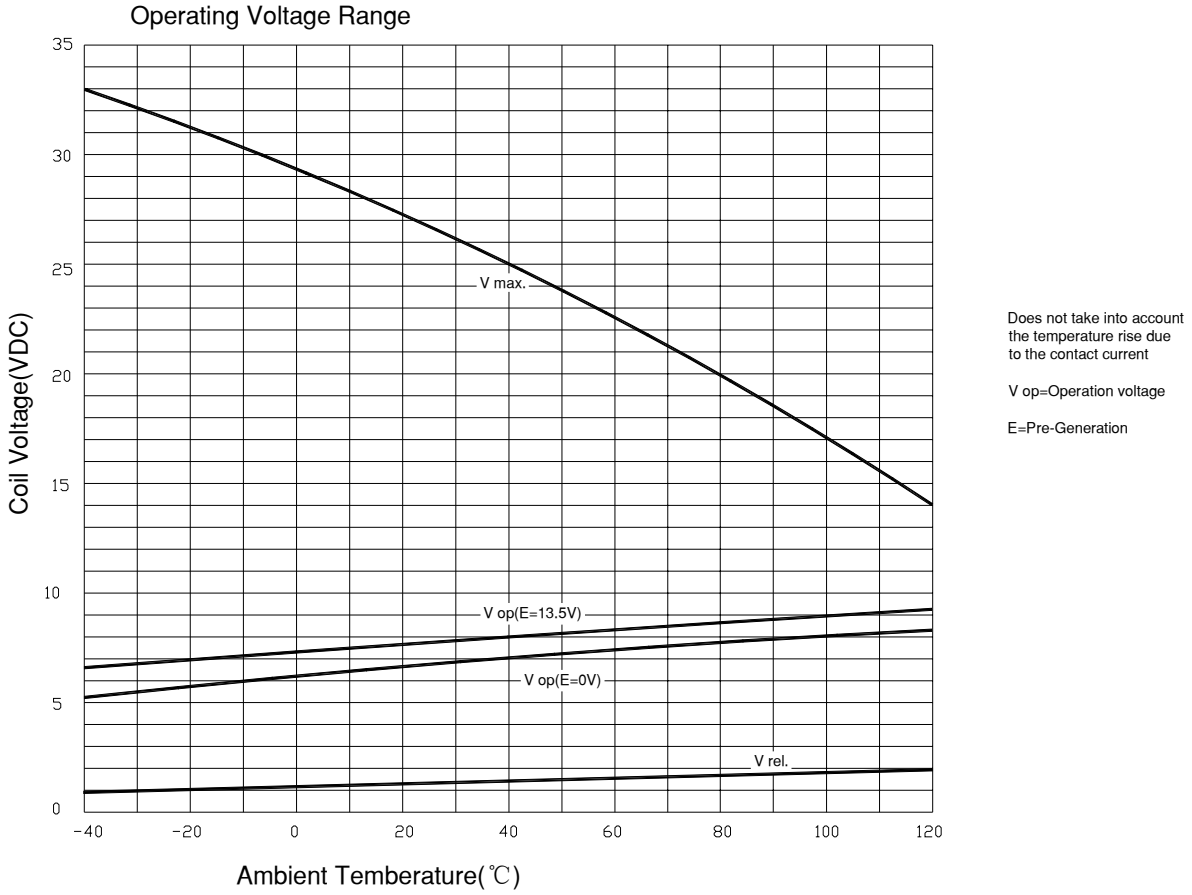

■OVERALL AND MOUNTING DIMENSIONS 安装图

Outline Dimensions-Single Relay

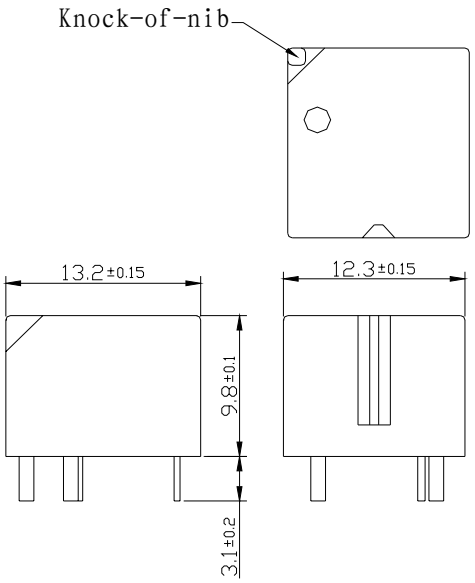

Wiring Diagrams-Single Relay(Bottom Views)

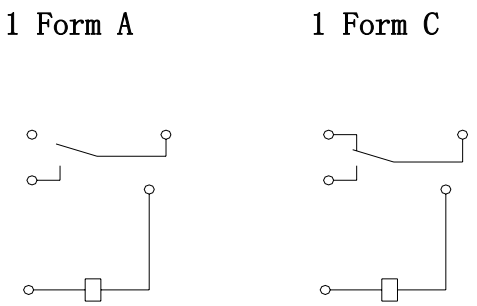

Suggested PC Board Layout-Single Relay(Bottom View)

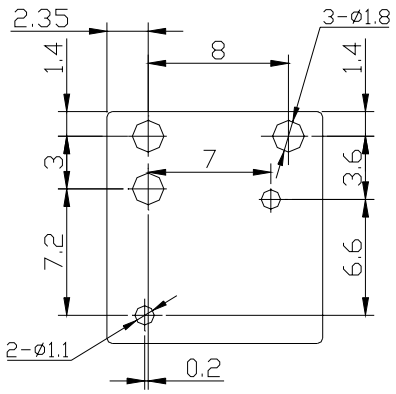

声明：

本产品规格书仅供客户使用时参考，如有更改，恕不另行通知。